SPK617-nn

Kiosk Peripheral arm portrait (With DuraTilt)

Version: 1.0

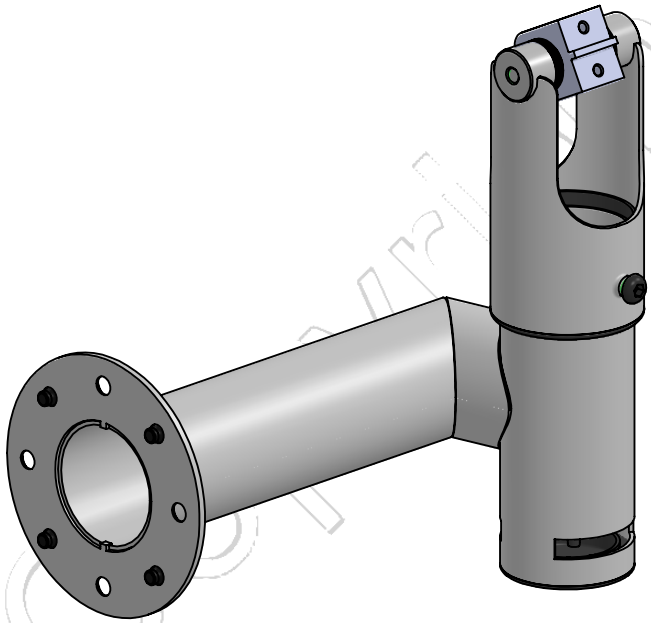

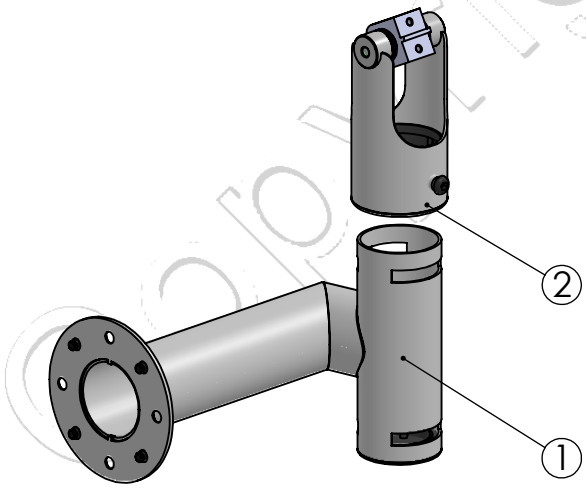

POS	PARTS LIST	QTY.	DESCRIPTION	BOX
1	C200269	1	Peripheral arm portrait: Max 24” screen portrait	
2	C700179_S4	1	SP2 DuraTilt Ø50,8 x 90mm for Kiosk	
	MK15-0395	1	Installation guide for Kiosk Peripheral arm	
	B0089	1	Box L365xW131xH113mm / L14.4xW5.2xH4.4in	

ADDITIONAL INFO:		
QTY. of configs in master box:	**Item Net Weight:** 0.80 kg | 1.76 lbs	**Pallet Capacity:** B0089 (192 items)
Colour: nn 02 = Black	05 = Iron Grey	32 = White

COPYRIGHT © ERGONOMIC SOLUTIONS 2023

Author: egn (12/05/2023) | Last Update: Jannik.Jacobsen (28/08/2023)