SPK615-nn

Kiosk Peripheral arm - landscape (With DuraTilt)

Version: 1.0

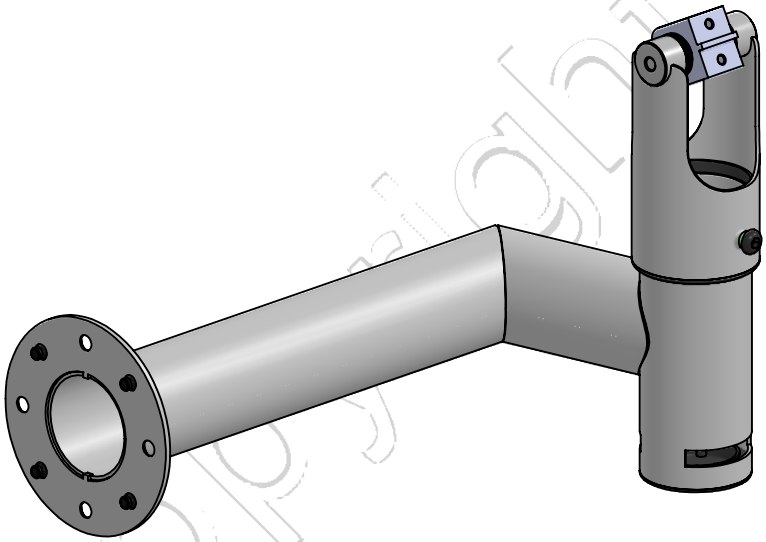

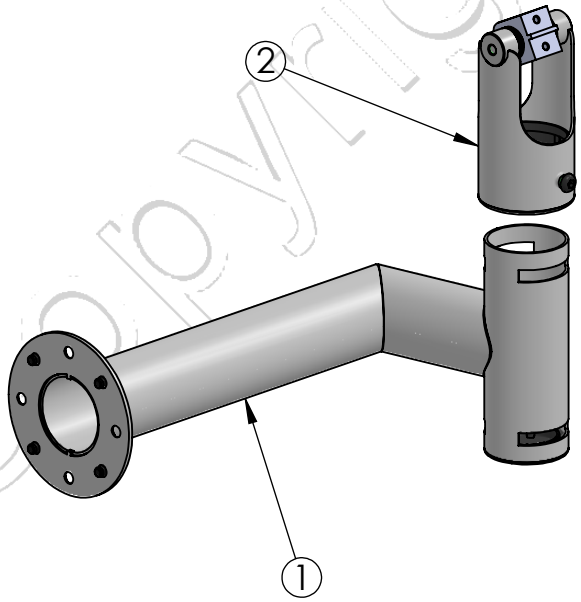

POS	PARTS LIST	QTY.	DESCRIPTION	BOX
1	C200270	1	Peripheral arm - landscape Max 24” screen landscape	
2	C700179_S4	1	SP2 DuraTilt Ø50,8 x 90mm for Kiosk	
	MK15-0395	1	Installation guide for Kiosk Peripheral arm	
	B0089	1	Box L365xW131xH113mm / L14.4xW5.2xH4.4in	

ADDITIONAL INFO:

QTY. of configs in master box: **Item Net Weight:** 0.99 kg | 2.18 lbs **Pallet Capacity:** B0089 (192 items)

Colour: nn 02 = Black 05 = Iron Grey 32 = White

COPYRIGHT © ERGONOMIC SOLUTIONS 2023

Author: egn (12/05/2023) | Last Update: Jannik.Jacobsen (28/08/2023)